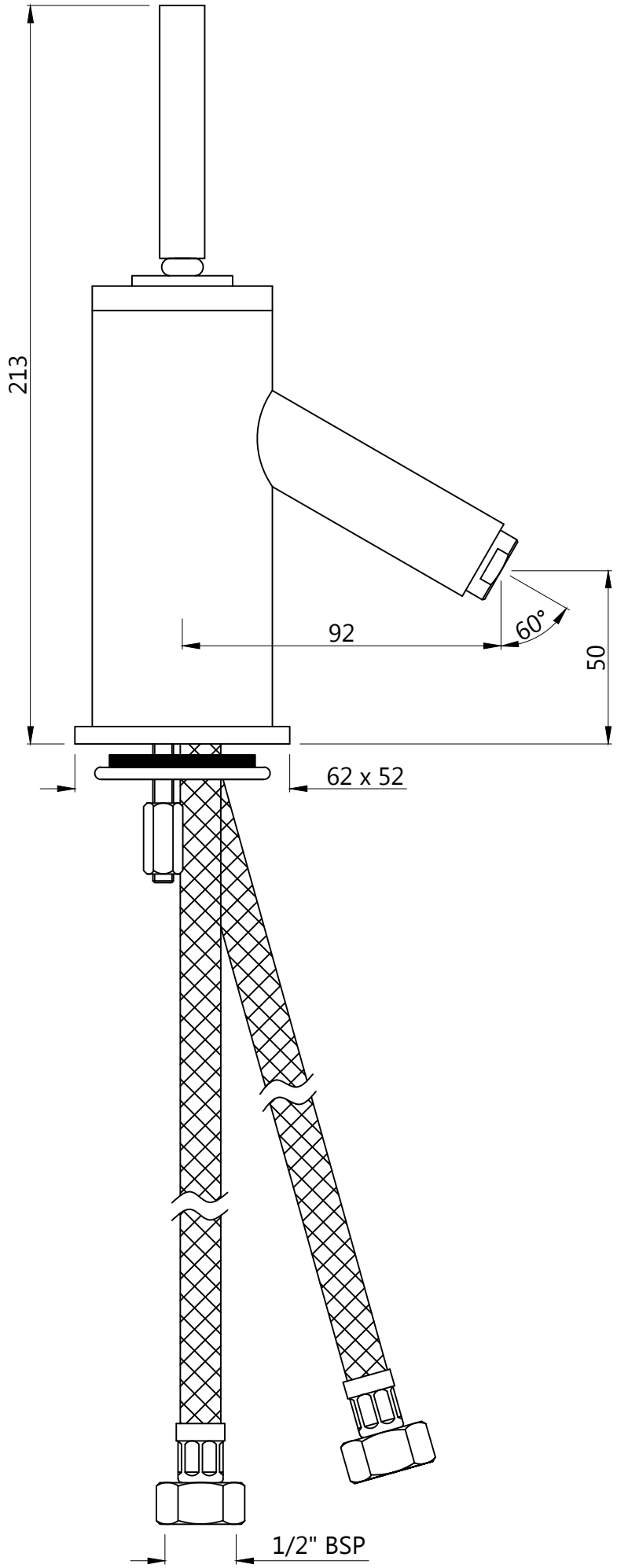Single Lever Joystick Basin Mixer Without Popup Waste System With 450mm Long Braided Hoses	Cat. No.-KAV-49011JB