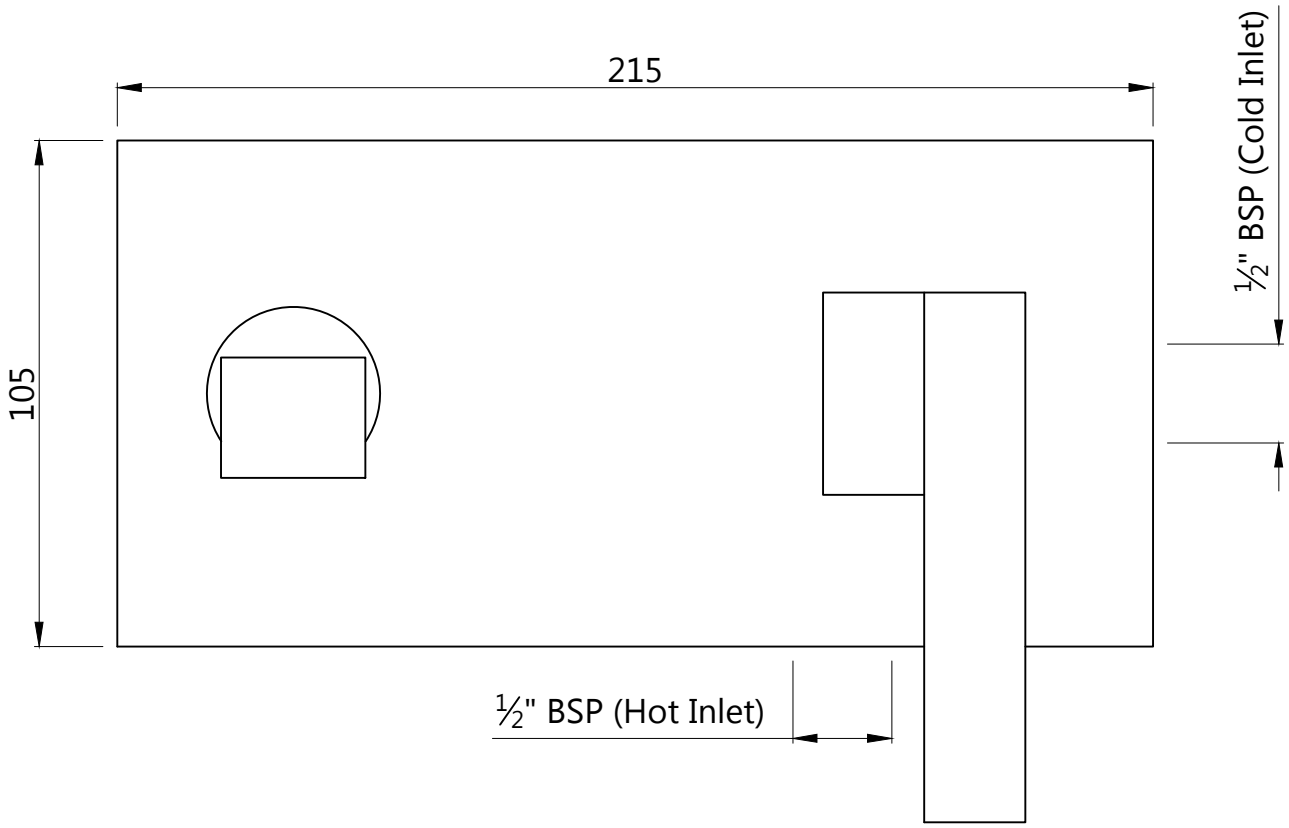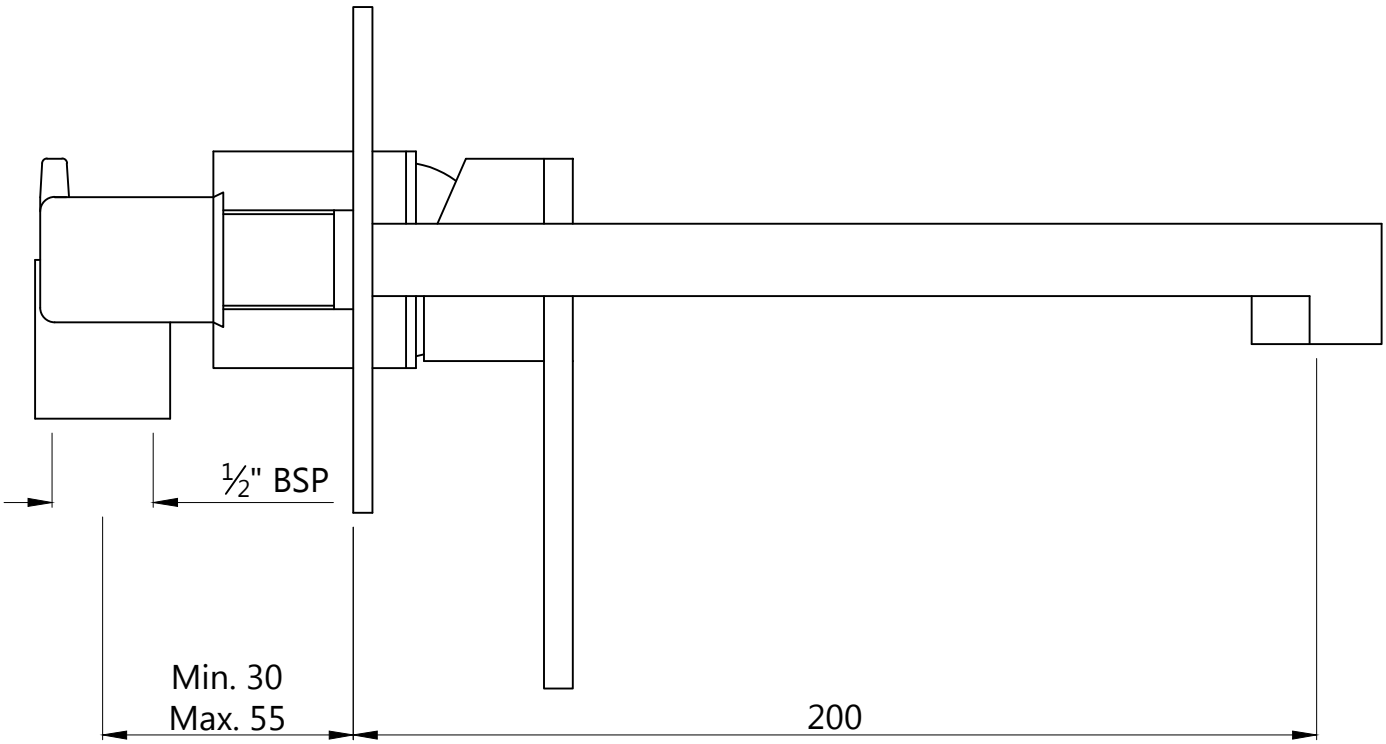Single Lever Concealed Basin Mixer With Spout	Cat. No.-LEB-45233