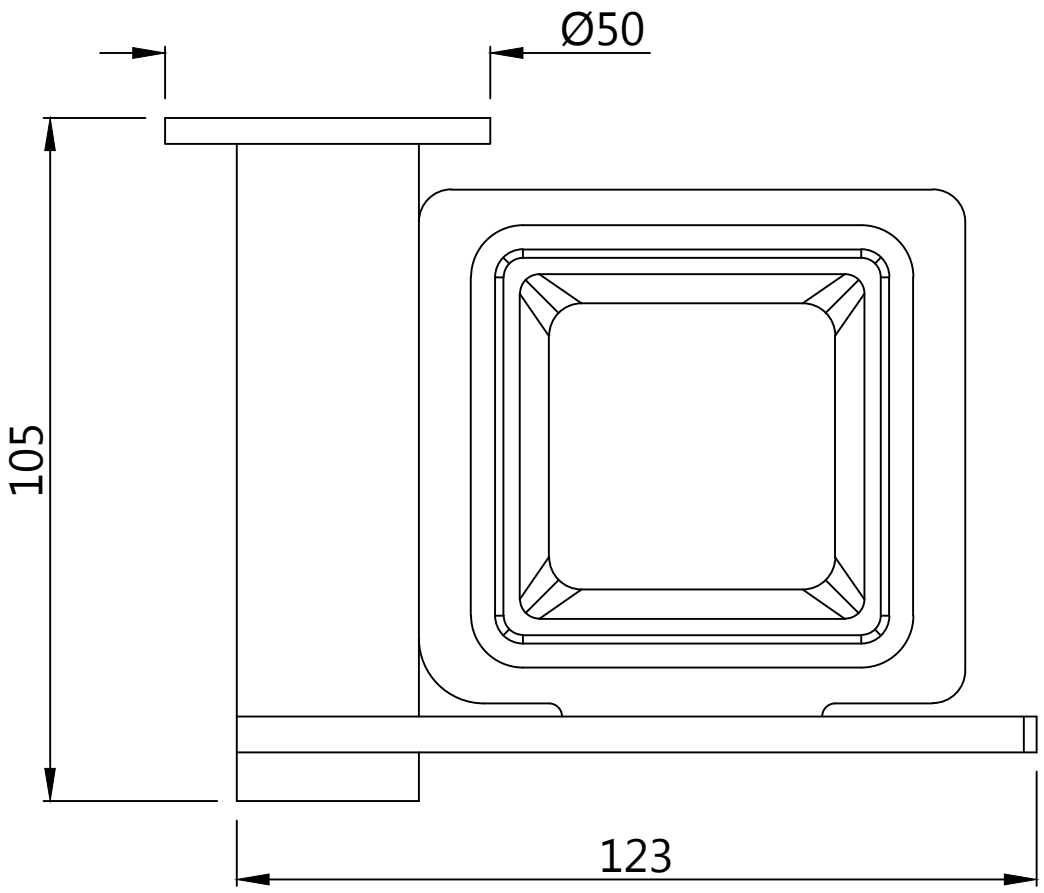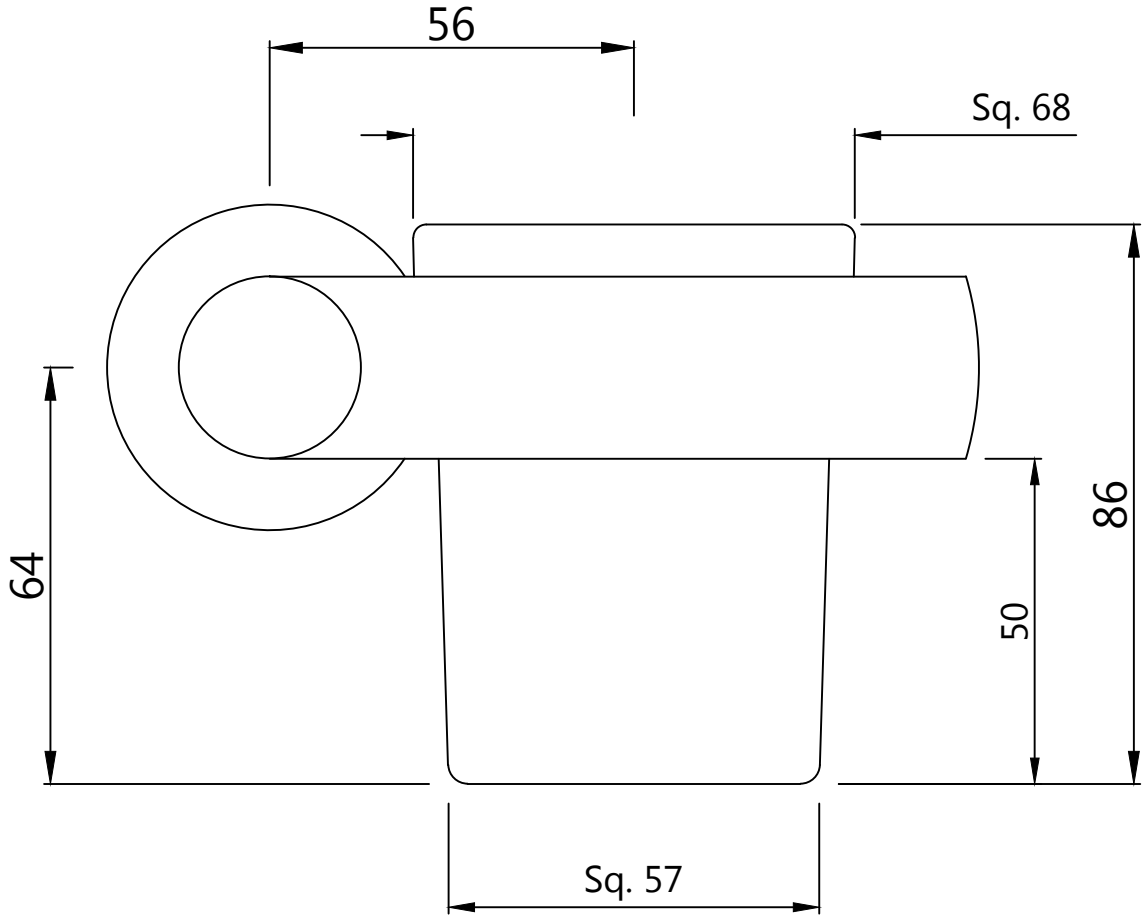Tumbler Holder	Cat. No. - ONY-59741