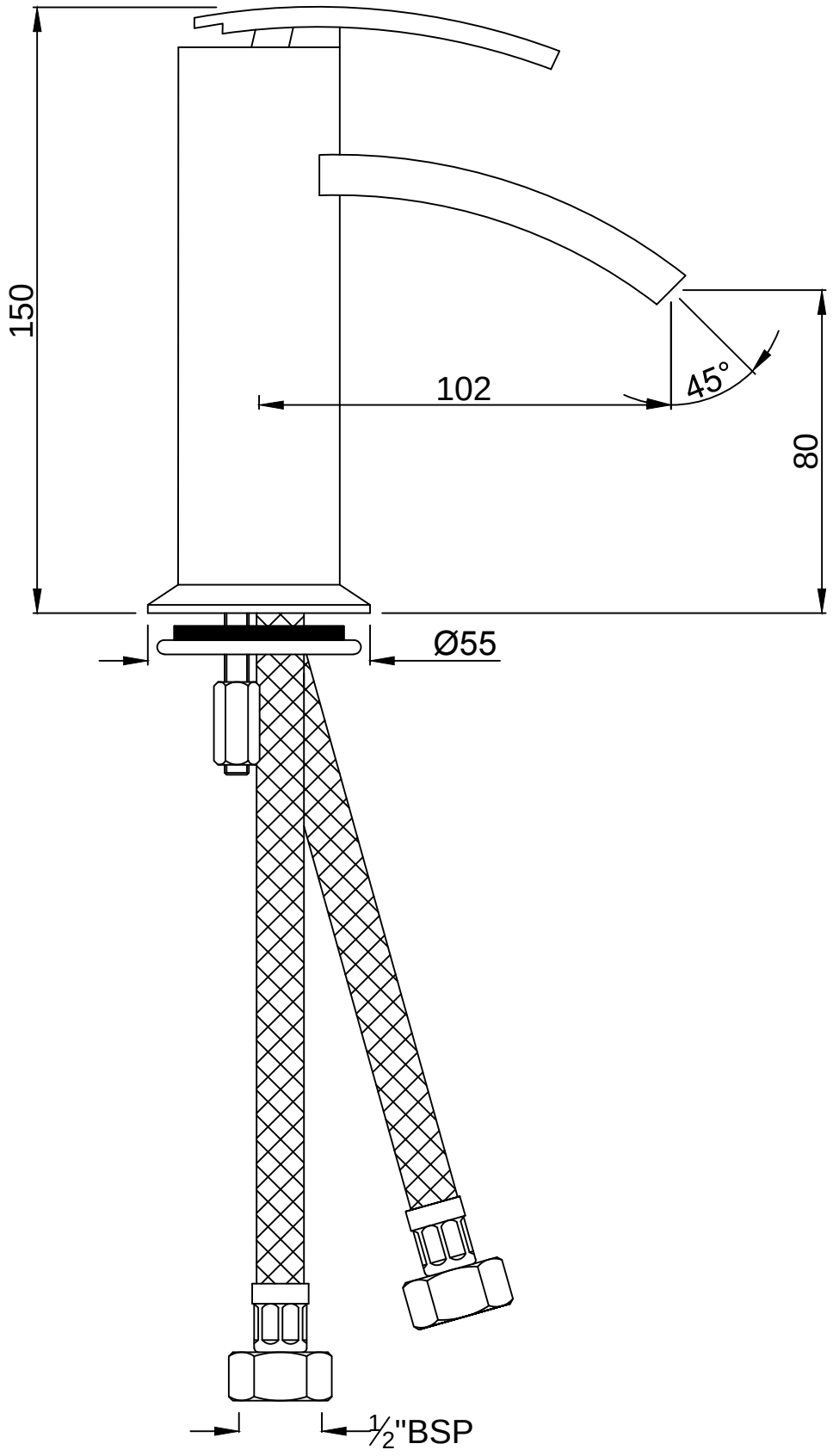Single Lever Basin Mixer with 450 mm Braided Hoses	CAT.NO. 41011 B