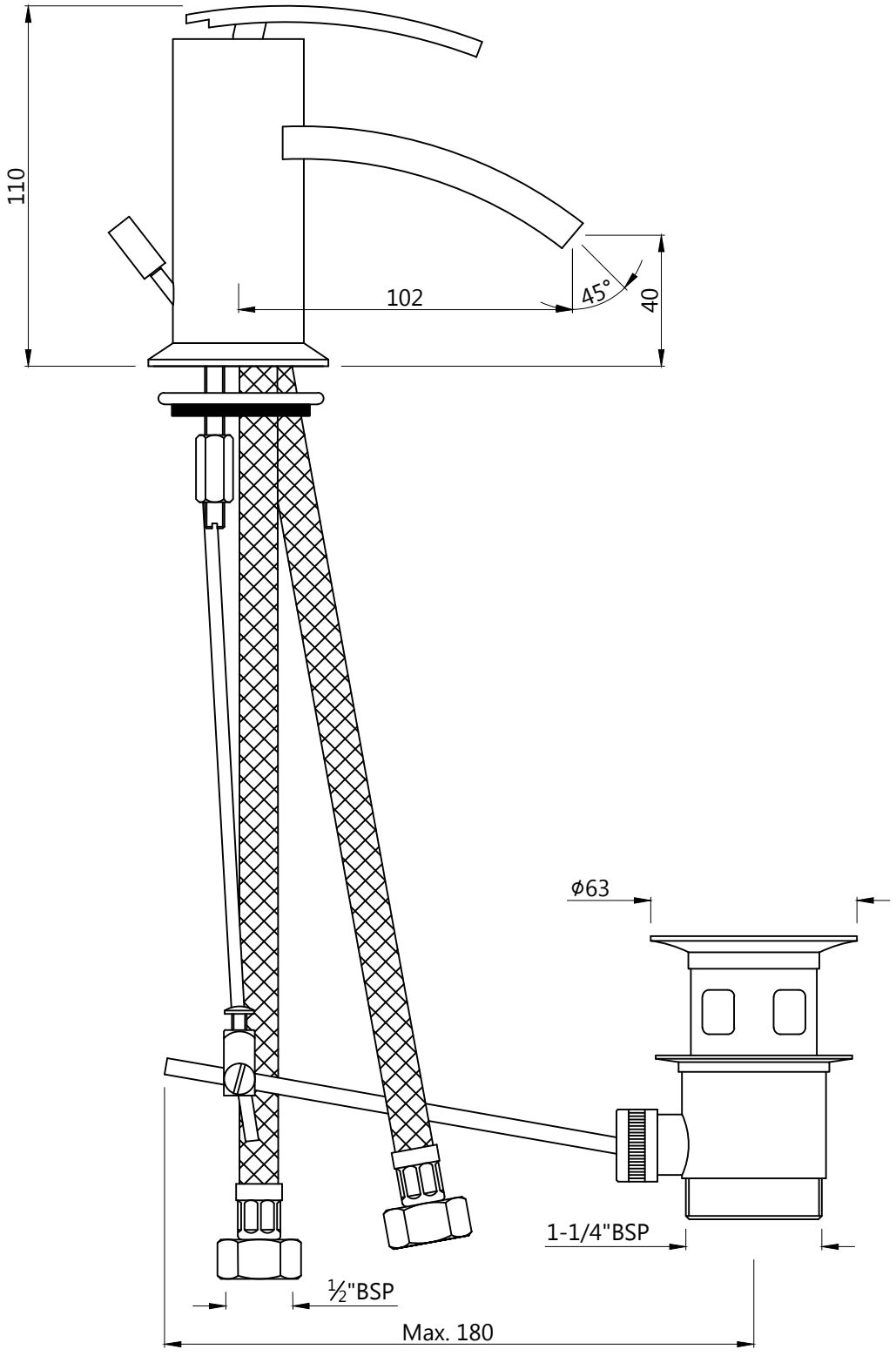Single Lever 1-Hole Bidet Mxr with Popup Waste System & 375mm Long Braided Hoses	Cat. No.-SIG-41213 B