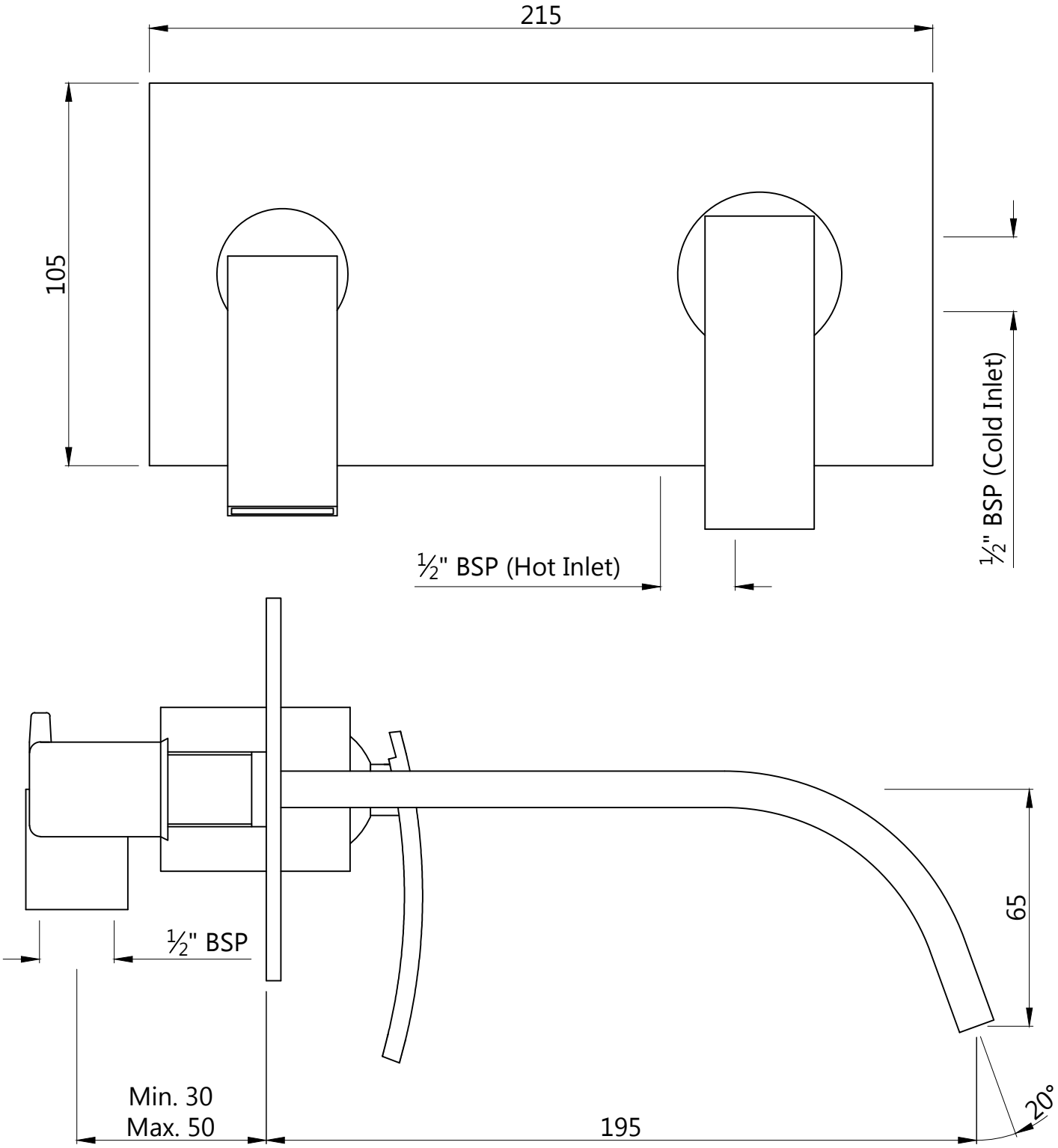Single Lever Concealed Basin Mixer with Spout	Cat. No.-SIG-41233