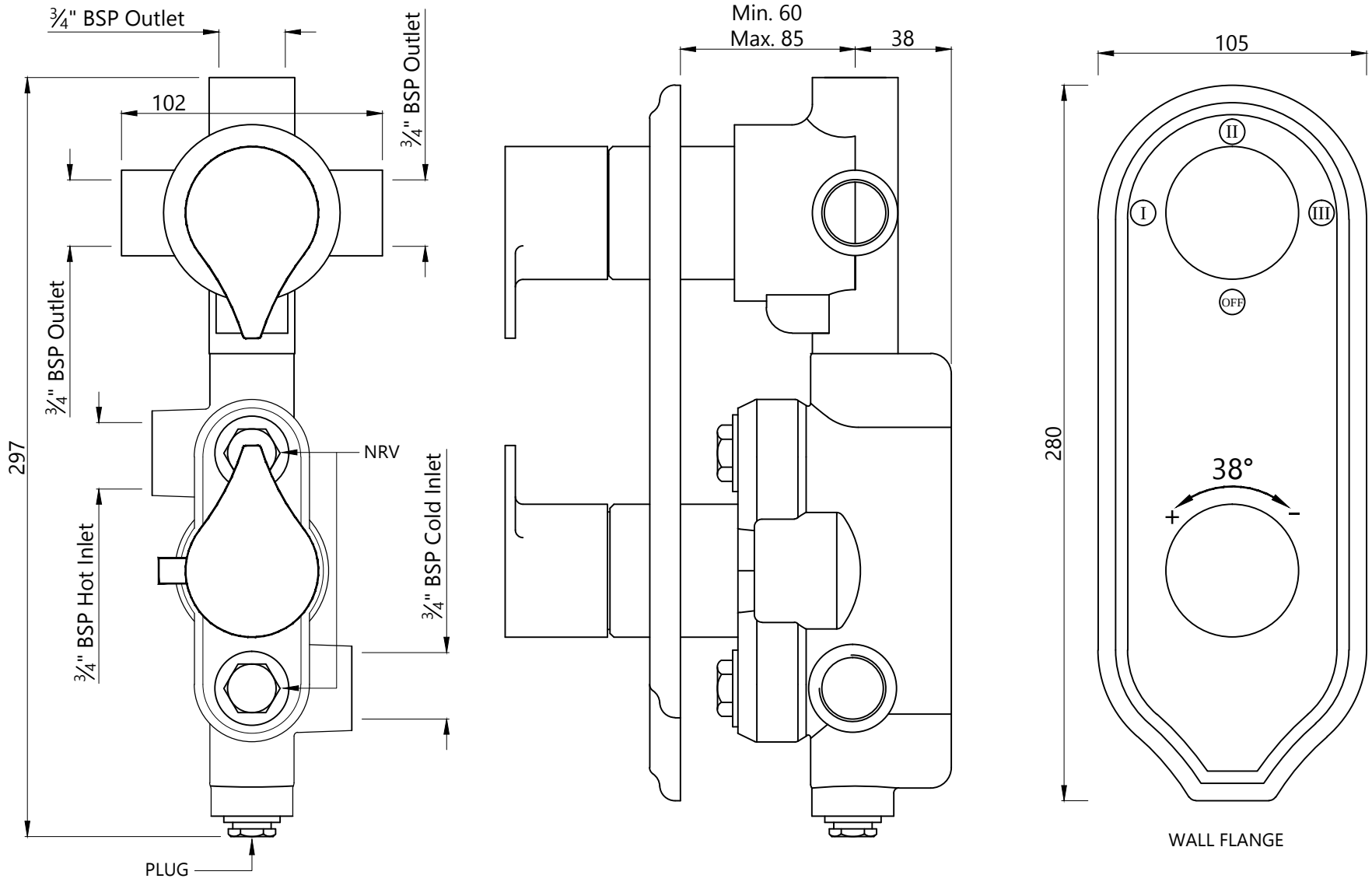TIAARA Concealed Thermostat with control unit for 3-Outlets and integrated Shut-off valve	Cat. No.-TIA-73683N